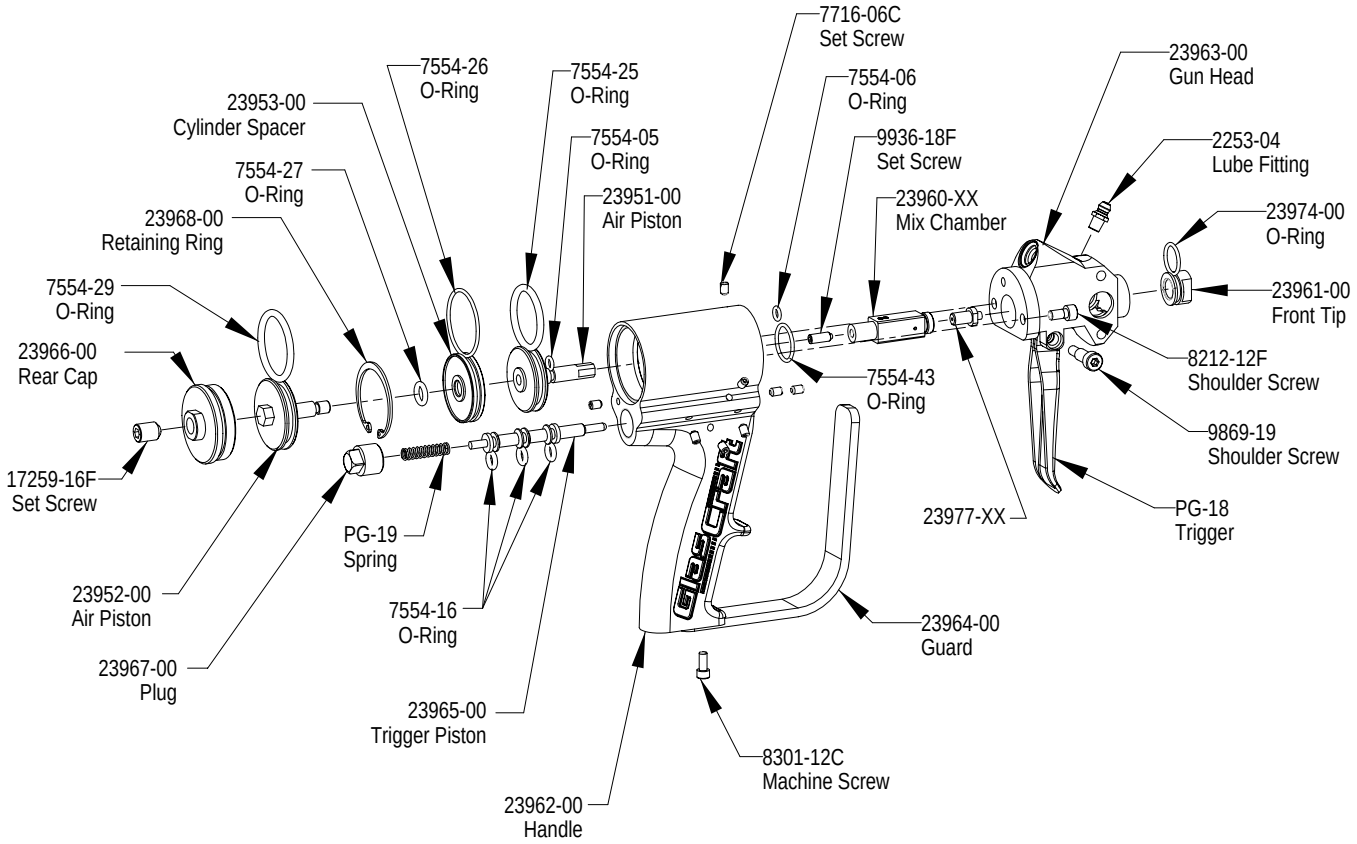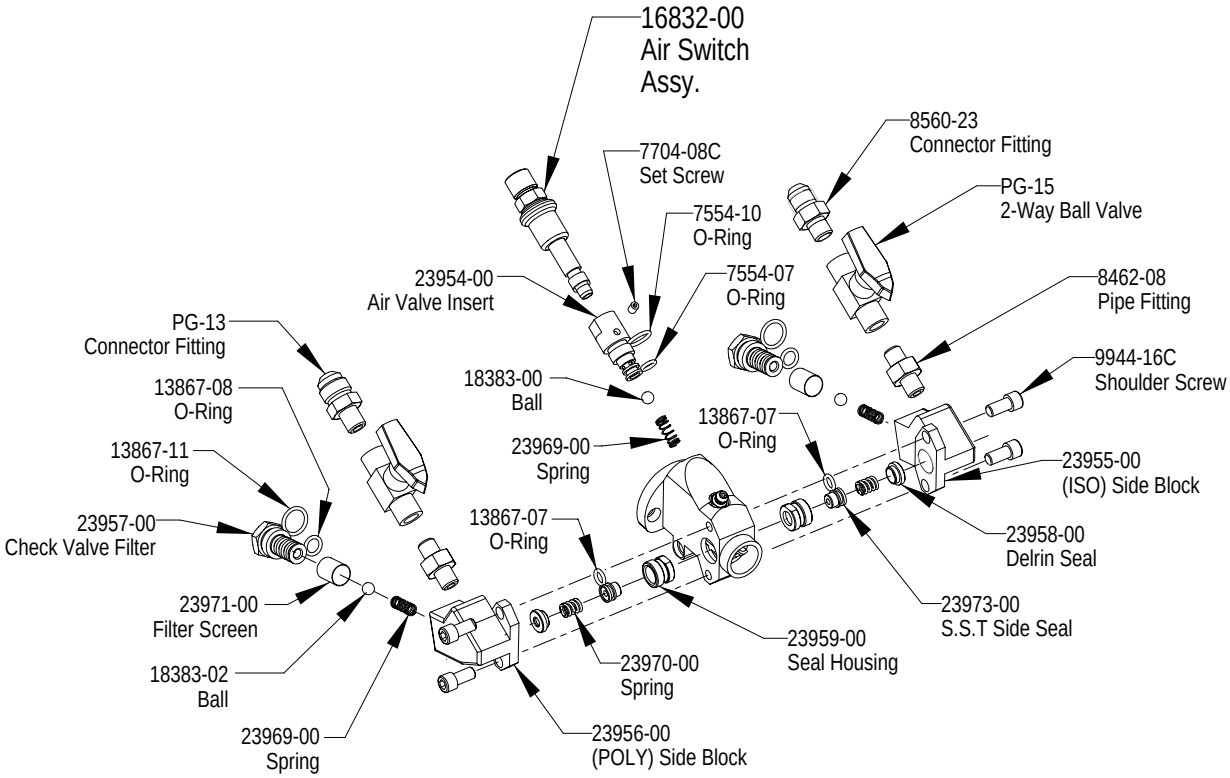23950-00 PROBLER P^2 SPRAY GUN